INSTRUCTION OF MODIFICATION

Sound Performance Lab

MODEL: GOLD MIKE 9844
REV: 1.1 DATE: January 21, 2009
created by: Jens Gronwald EMail: jens@spl.info

Modification

Please note: This modification is already carried out for units above serial number 9445305 and replaces the instruction of modification 1.0 from July 01, 2008.

Reason for modification:

An adaption of the series resistor of the zener diodes will be necessary. The 68kOhms resistor from last instruction of modification will be replaced by a 39kohms resistor.
All other modifications have been retained unchanged:

The series resistors of the zener diodes must be exchanged and the zener diodes ZY68 and ZY47 will be replaced by 500mW types BZX79A75 and BZX79A47. Furthermore a 47Ohms resistor will be inserted to limit the switch-on current.

Materials needed:

1 x resistor 47 Ohms, metal film, 1-5%, 2W
1 x resistor 39 kOhms, metal film, 1-5%, 2W
1 x resistor 12 kOhms, metal film, 1-5%, 0,25W
1 x zener diode BZX79A75
1 x zener diode BZX79A47

How to do:

Please cut the track at the marked position on the bottom side (solder side) of the PCB (see picture 1) and insert the 47Ohms resistor between the main transformer and the rectifier diodes on the solder side.

The 47kOhms resistors (both marked red) will be replaced by just one 39kOhms resistor. Keep the place of the second 47kOhms resistor unpopulated.

The series resistor for the 47V zener diode will be changed from 22kOhm to 12kOhm.

The zener diodes ZY47 and ZY68 will be replaced by 500mW zener diodes BZX79A75 and BZX79A47 (see picture 2).

INSTRUCTION OF MODIFICATION

Sound Performance Lab

MODEL: GOLD MIKE 9844
REV: 1.1
created by: Jens Gronwald

DATE: January 21, 2009
EMail: jens@spl.info

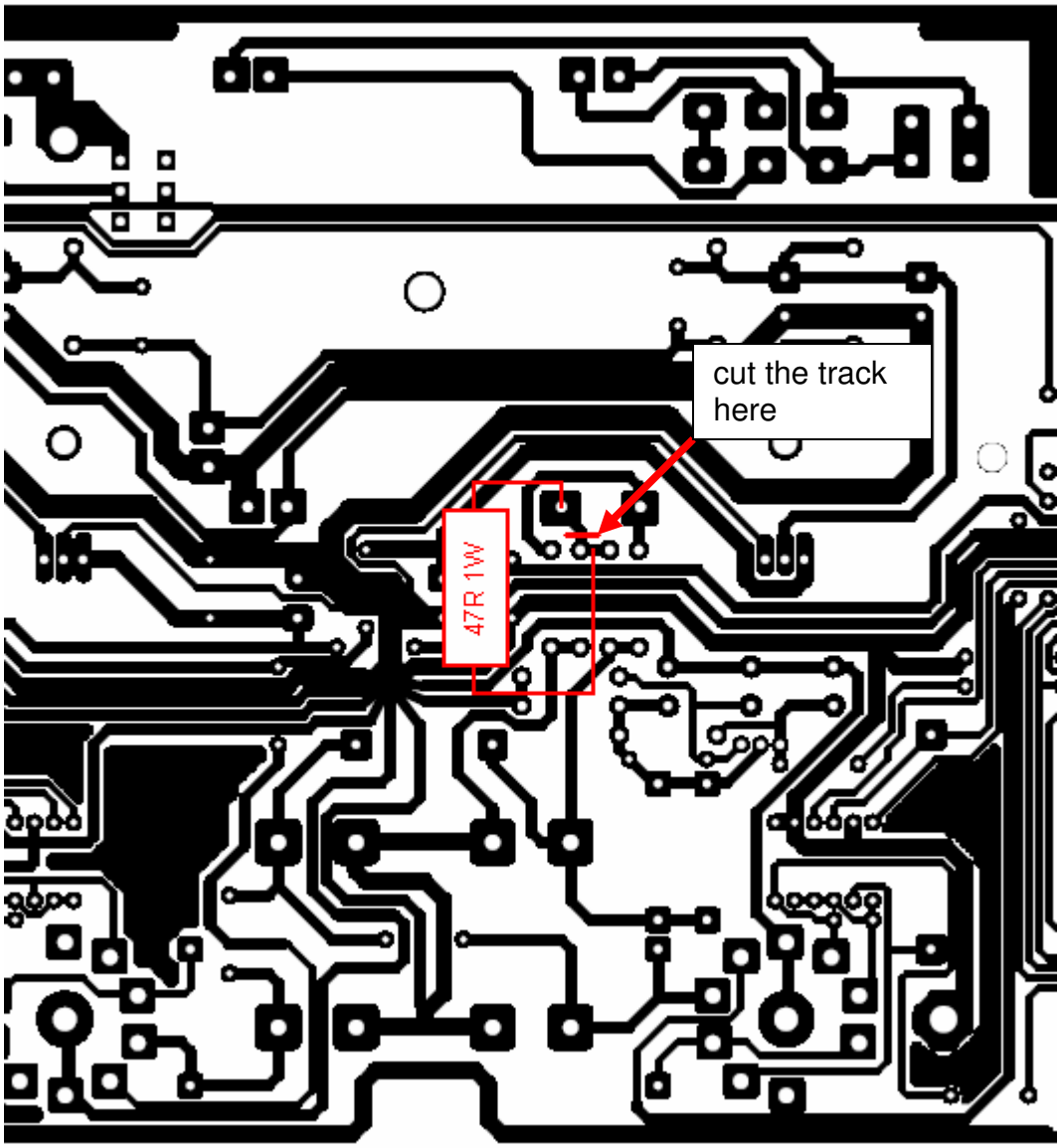

picture 1

INSTRUCTION OF MODIFICATION

Sound Performance Lab

MODEL: GOLD MIKE 9844
REV: 1.1 DATE: January 21, 2009
created by: Jens Gronwald EMail: jens@spl.info

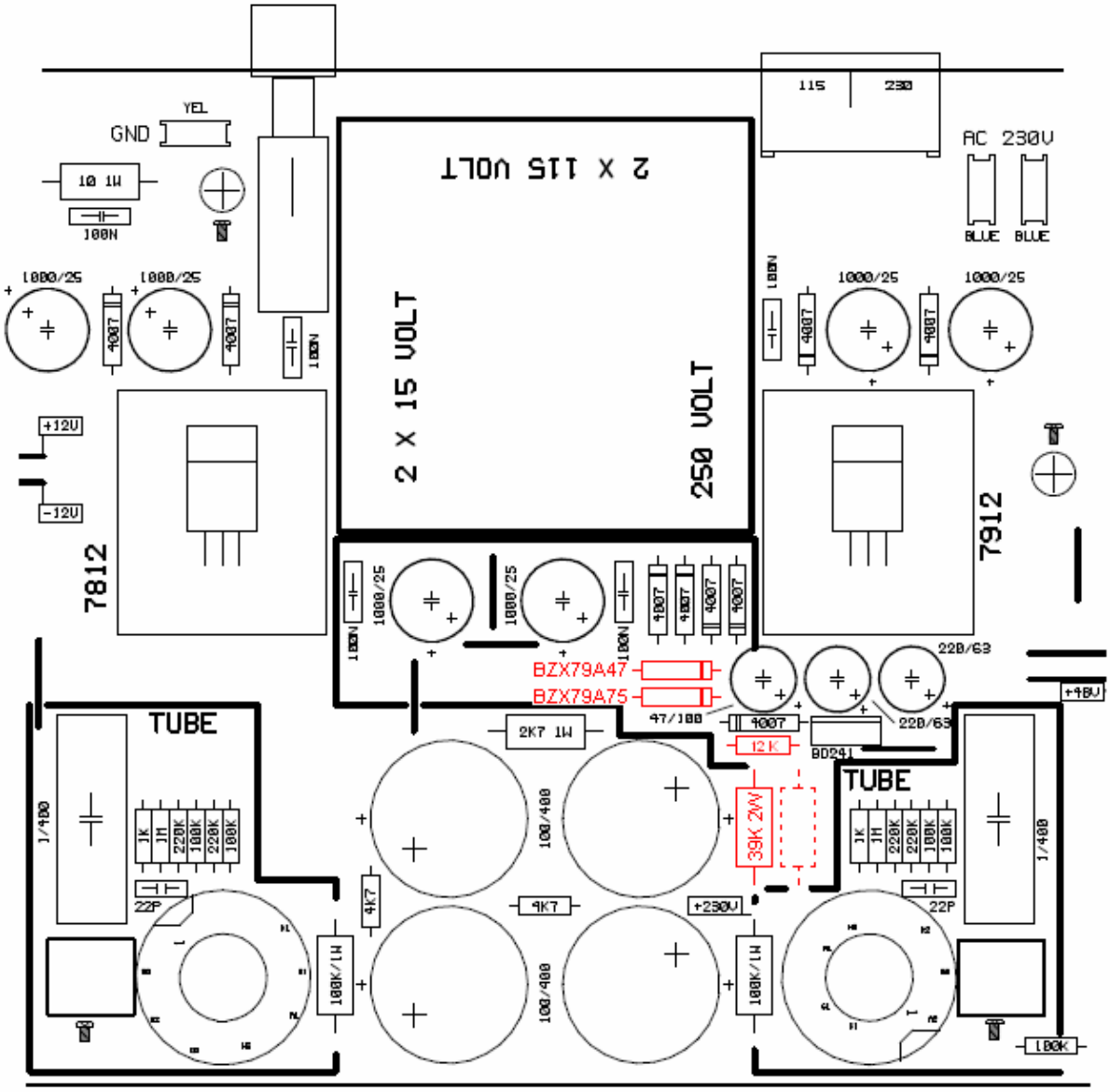

picture 2

INSTRUCTION OF MODIFICATION

Sound Performance Lab

MODEL: GOLD MIKE 9844
REV: 1.1 DATE: January 21, 2009
created by: Jens Gronwald EMail: jens@spl.info

Schematics

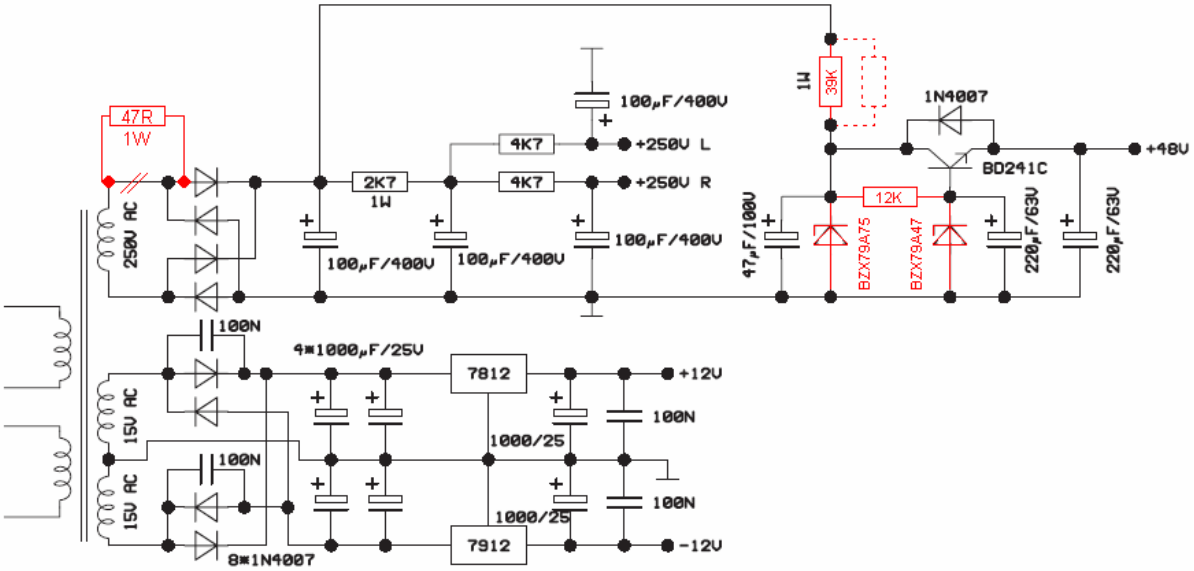

picture 3