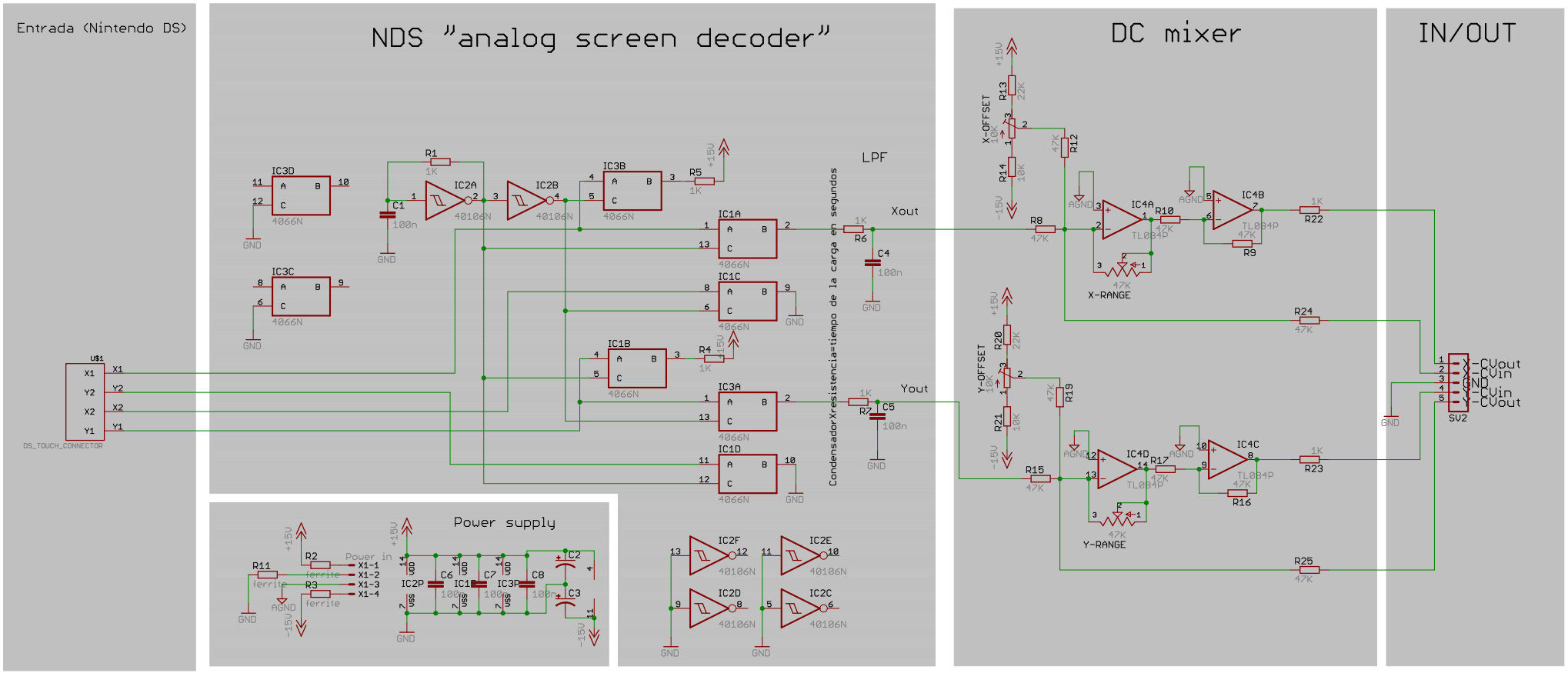
Entrada (Nintendo DS)
NDS "analog screen decoder"
DC mixer
IN/OUT
Power supply
LPF
Xout
Yout
CondensadorXresistencia=tiempo de la carga en segundos
X-OFFSET
Y-OFFSET
X-RANGE
Y-RANGE
DS_TOUCH_CONNECTOR
SV2
-CVout
-CVin
GND
-CVin
-CVout
Power in
X1-1
X1-2
X1-3
X1-4
IC3D
IC3C
IC2A
IC2B
IC3B
IC1A
IC1C
IC1B
IC3A
IC1D
IC2F
IC2E
IC2D
IC2C
IC4A
IC4B
IC4C
IC4D
TL084P
4066N
40106N
R1
R2
R3
R4
R5
R6
R7
R8
R9
R10
R11
R12
R13
R14
R15
R16
R17
R19
R20
R21
R22
R23
R24
R25
C1
C2
C3
C4
C5
C6
C7
C8
ferrite
AGND
+15V
-15V