elgam ®

the ENTERTAINER 8 - 13

SCHEMATIC DIAGRAMS

Scanned by CamScanner

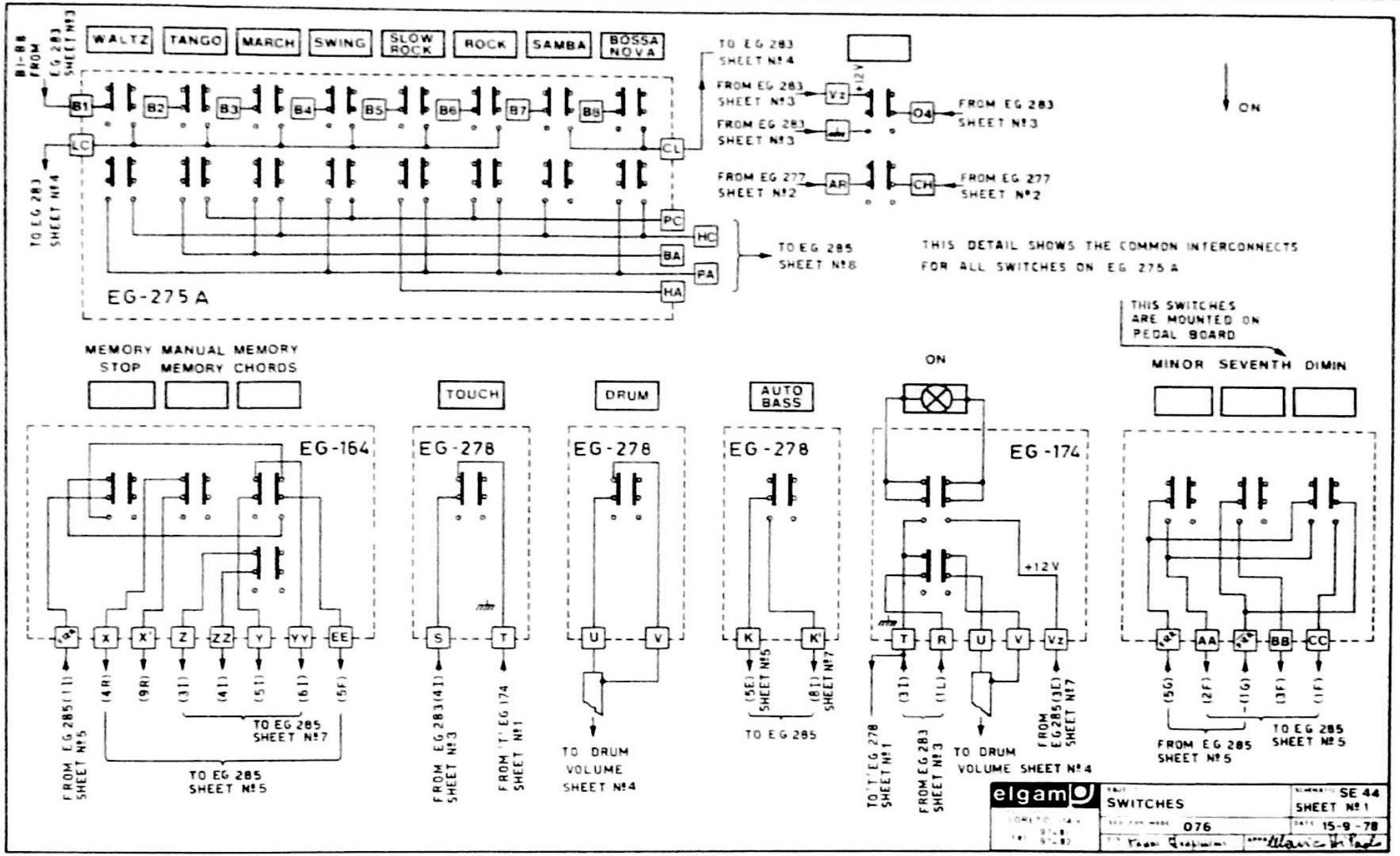

Scanned by CamScanner

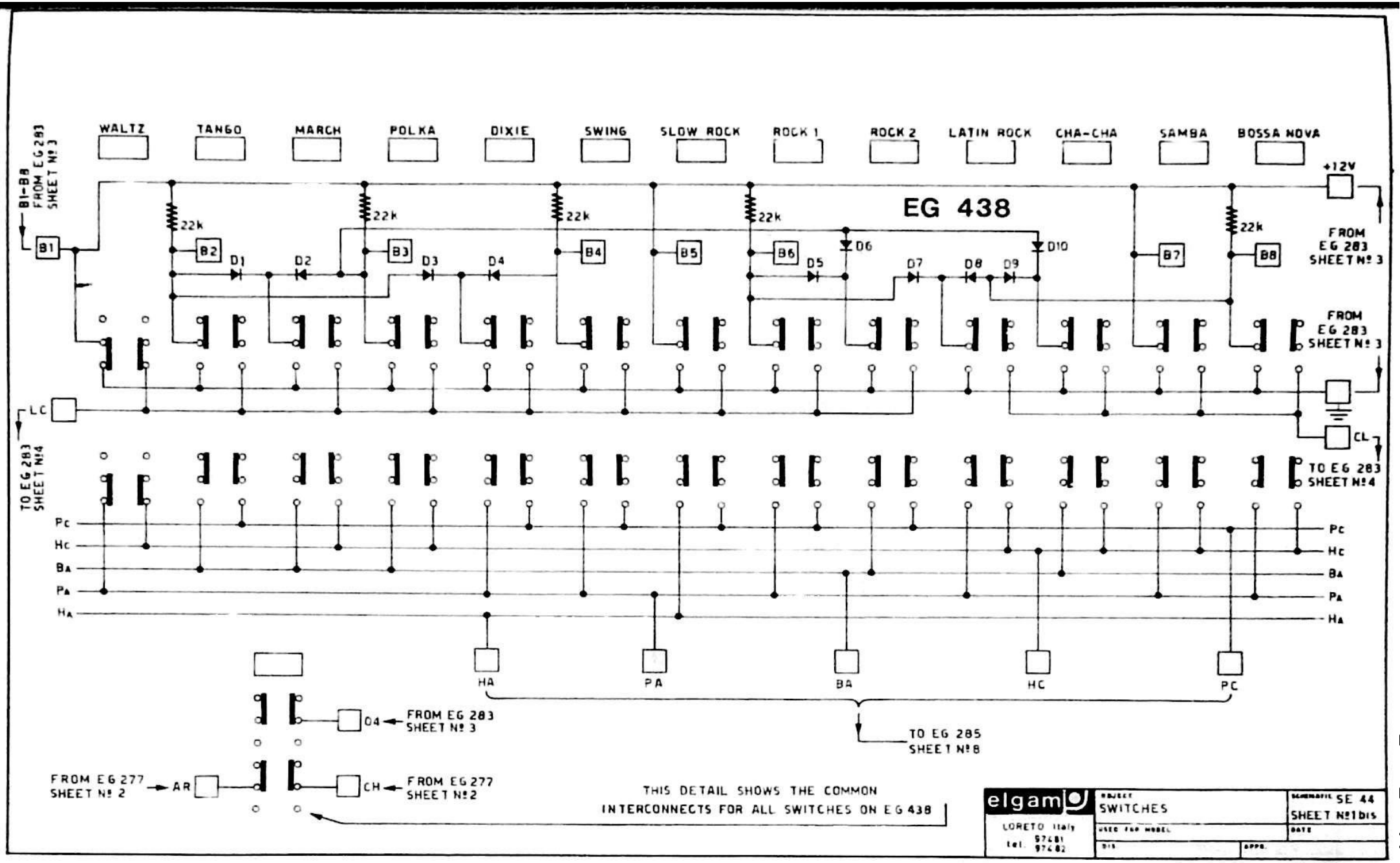

Scanned by CamScanner

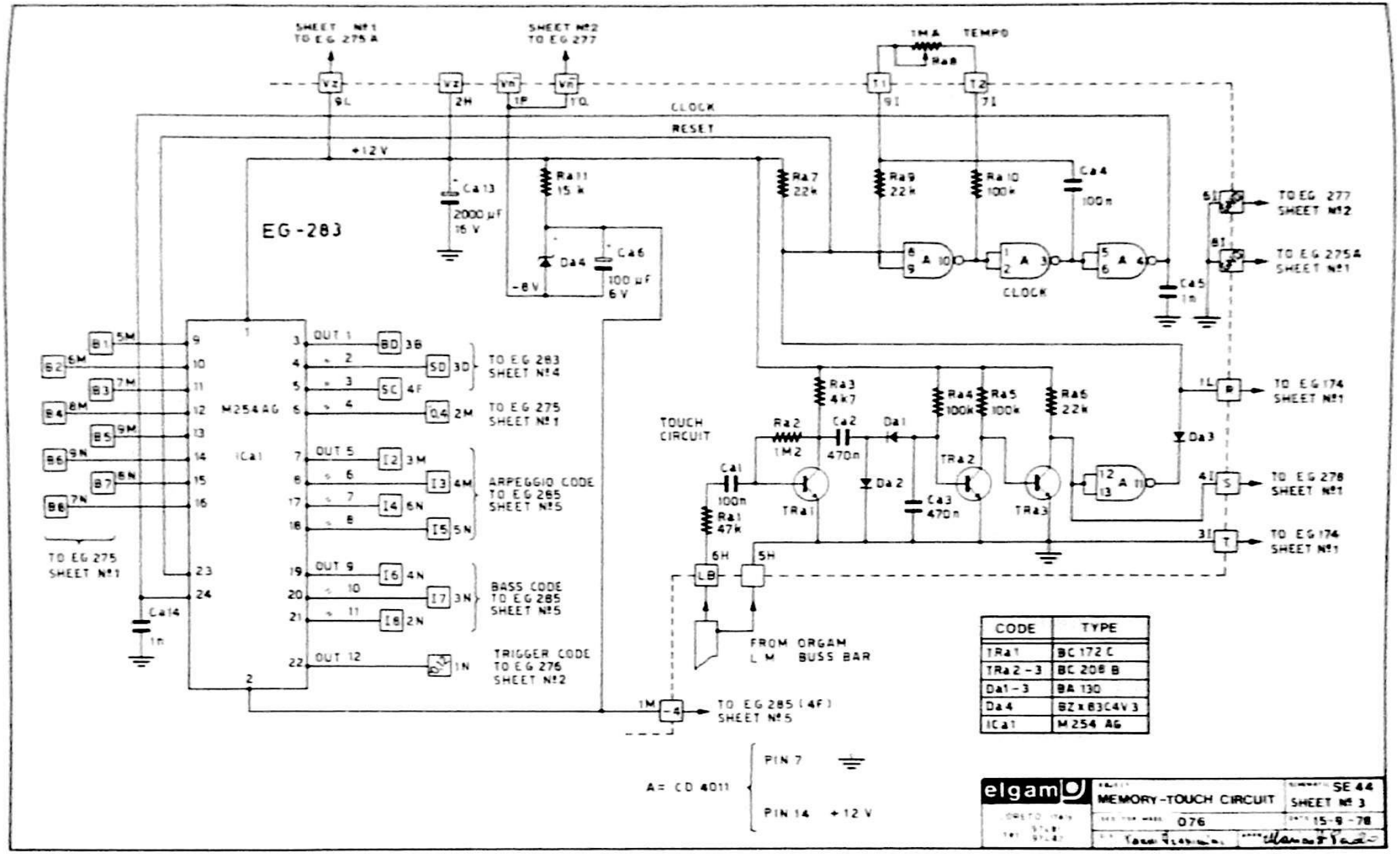

CODE	TYPE
TRa1	BC 172 C
TRa2 - 3	BC 208 B
Da1 - 3	BA 130
Da4	BZx83C4V3
(Ca1)	M 254 AG

Scanned by CamScanner

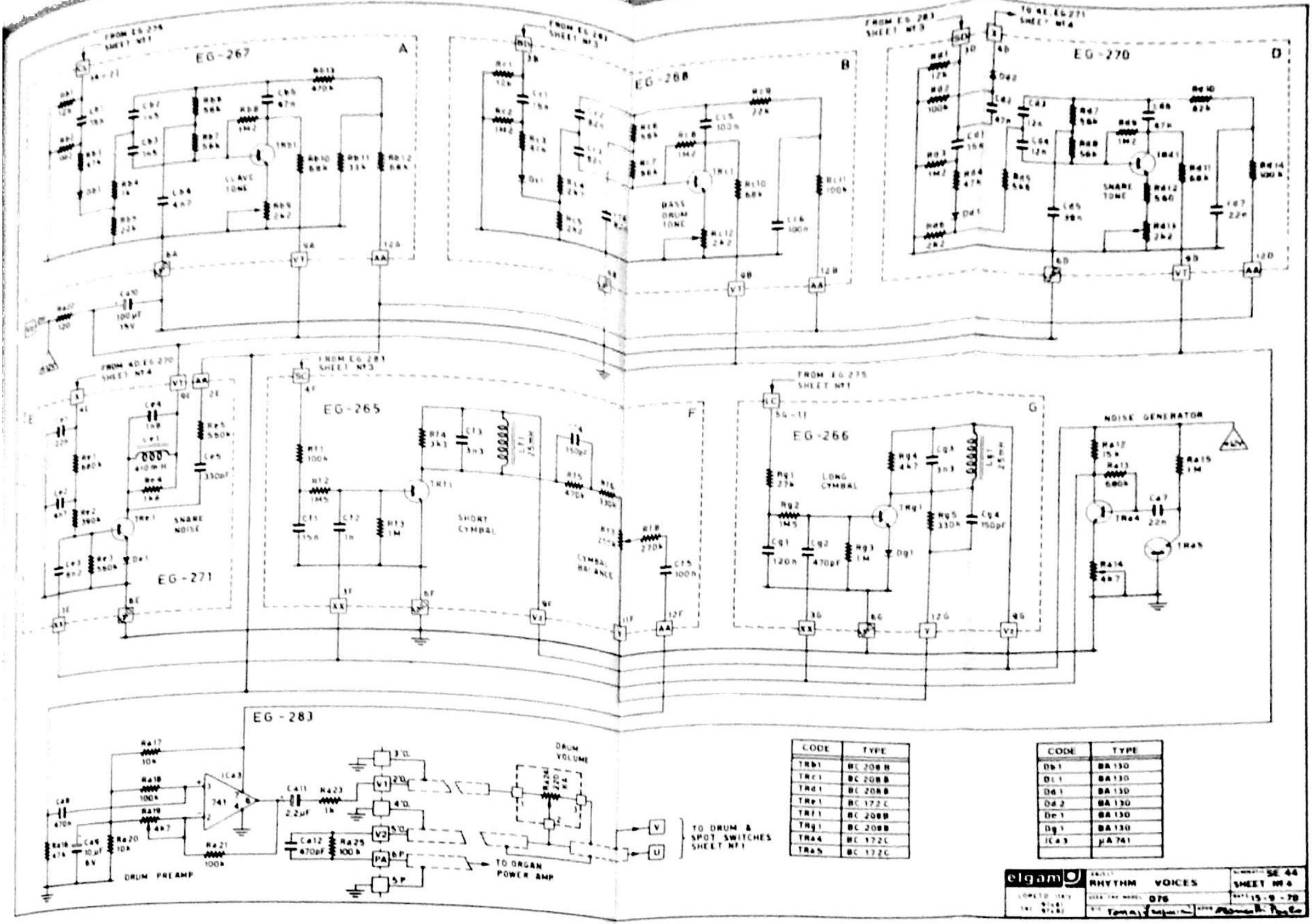

CODE	TYPE
TRb1	BC 208 B
TRc1	BC 208 B
TRd1	BC 208 B
TRe1	BC 172 C
TRf1	BC 208 B
TRg1	BC 208 B
TRa4	BC 172 C
TRa5	BC 172 C

CODE	TYPE
Db1	BA 130
Dc1	BA 130
Dd1	BA 130
Dd2	BA 130
De1	BA 130
Dg1	BA 130
ICa3	μA 741

Scanned by CamScanner

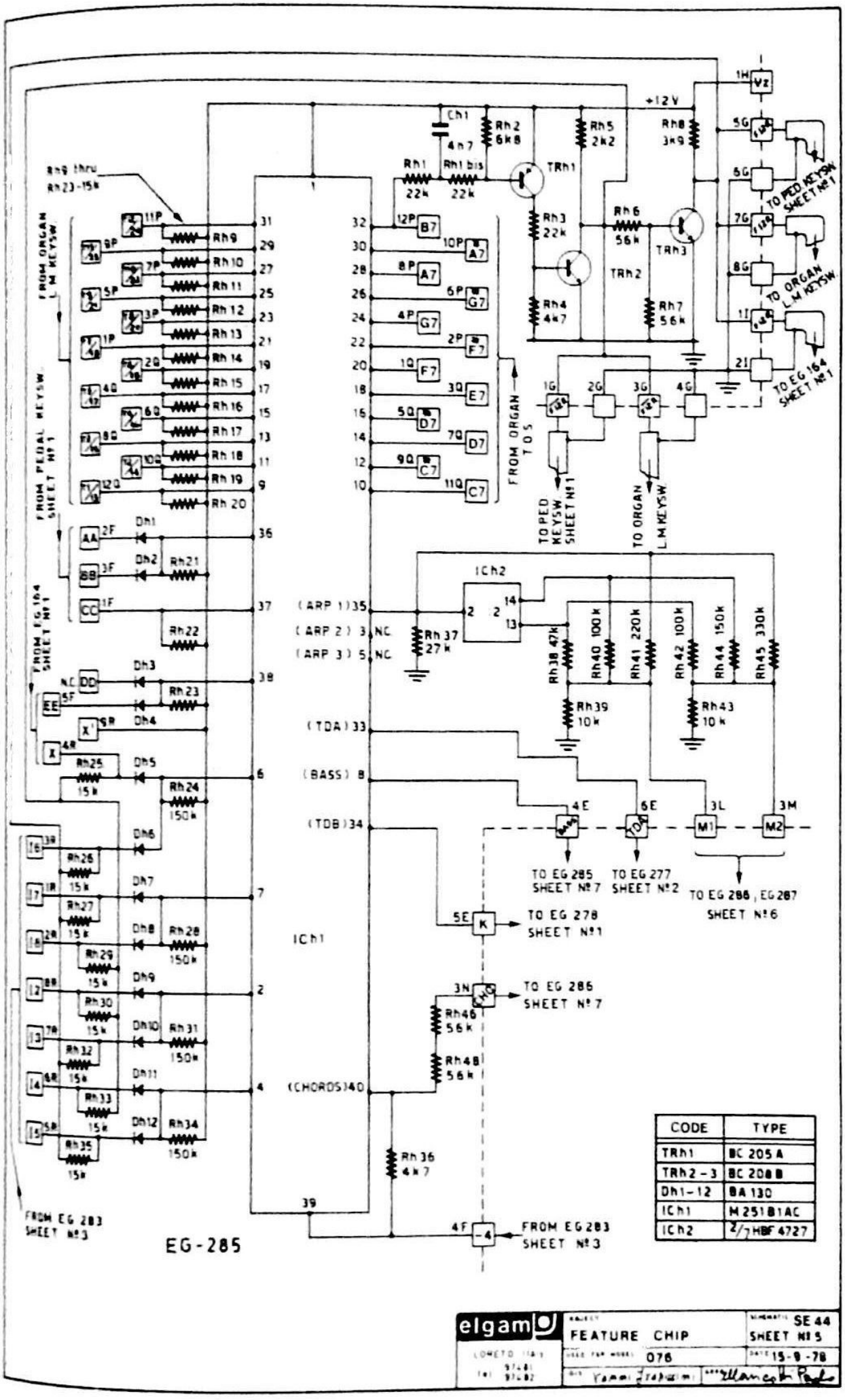

Scanned by CamScanner

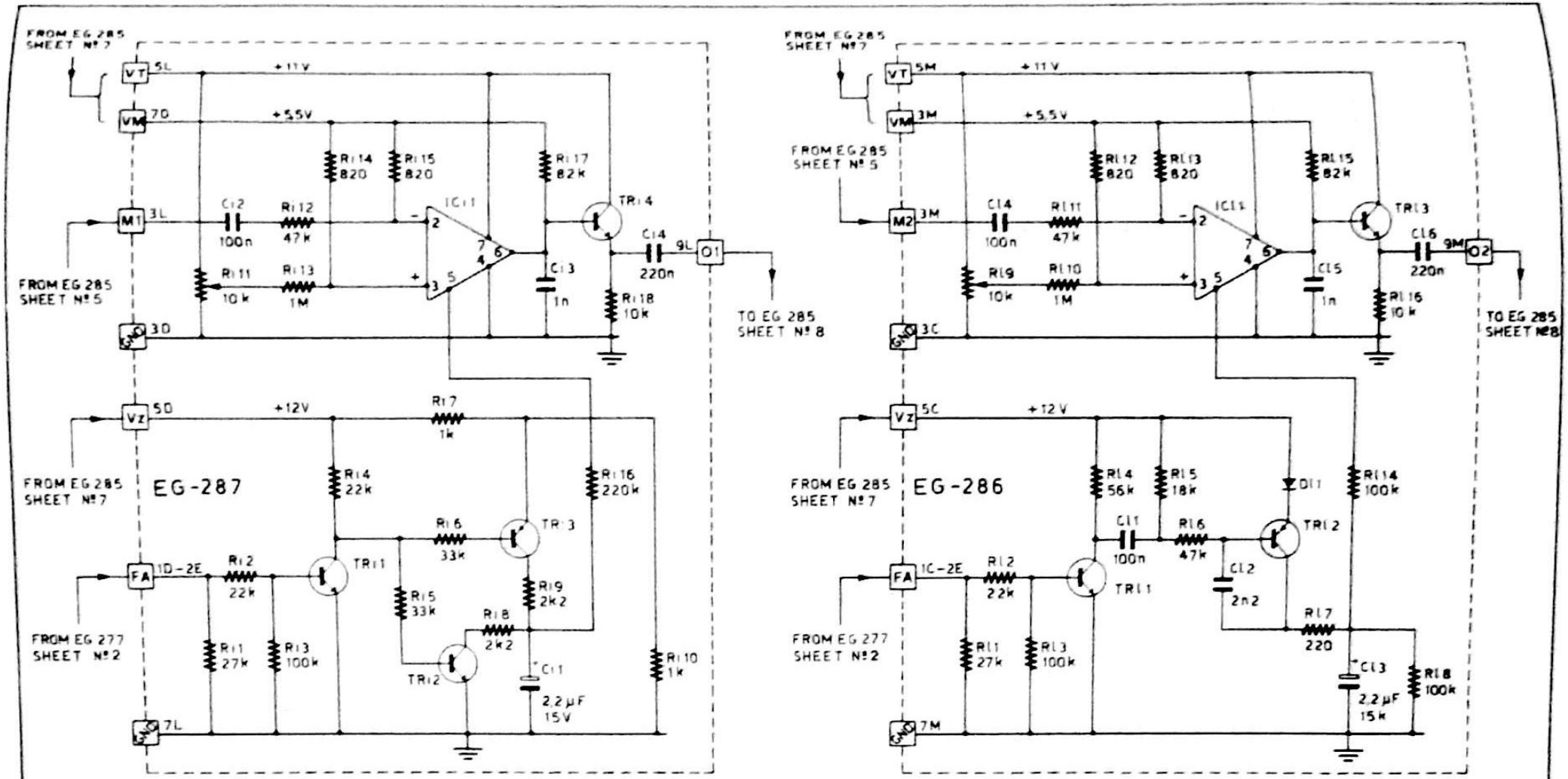

BRASS ARPEGGIO MODULATOR

CODE	TYPE
TRI 1	BC 208 B
TRI 2	BC 208 B
TRI 3	BC 205 A
TRI 4	BC 173 C
IC I 1	CA 3080

CODE	TYPE
TRL 1	BC 208 B
TRL 2	BC 205 A
TRL 3	BC 173 C
DL 1	BA 130
IC L 1	CA 3080

PIANO-HARPSY ARPEGGIO MODULATOR

elgam

CORETO Italy

ENVELOPE CIRCUITS AND MODULATORS

076

SCHEMATIC SE 44

SHEET Nº 6

DATE 15-9-78

Scanned by CamScanner

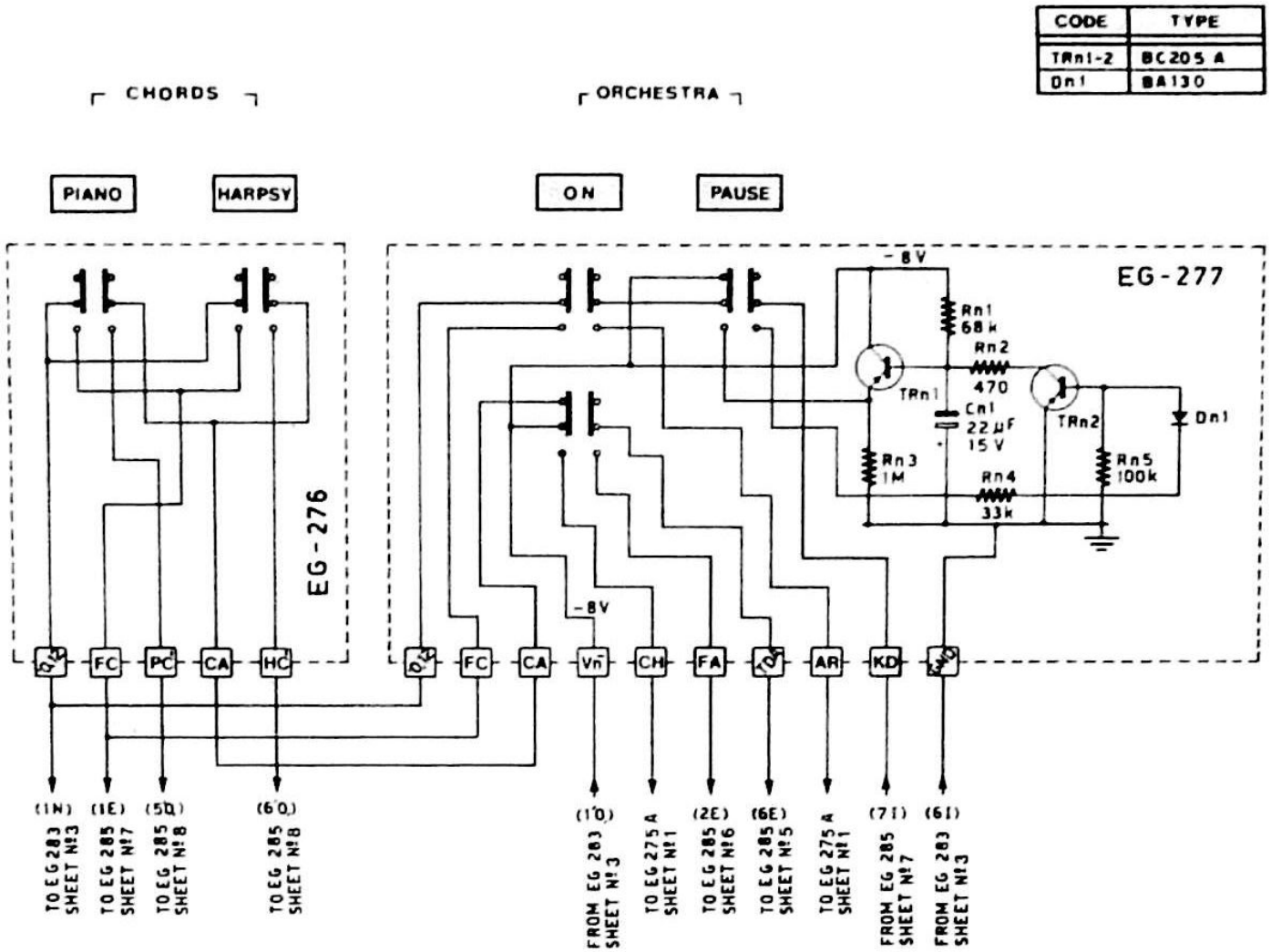

CODE	TYPE
TRn1-2	BC205 A
Dn1	BA130

elgam
LORETO (Italy)
Tel 97681 97682

SWITCHES
USED FOR MODEL 076
SCHEMATIC SE 44
SHEET Nº 2
DATE 15-9-78

Scanned by CamScanner

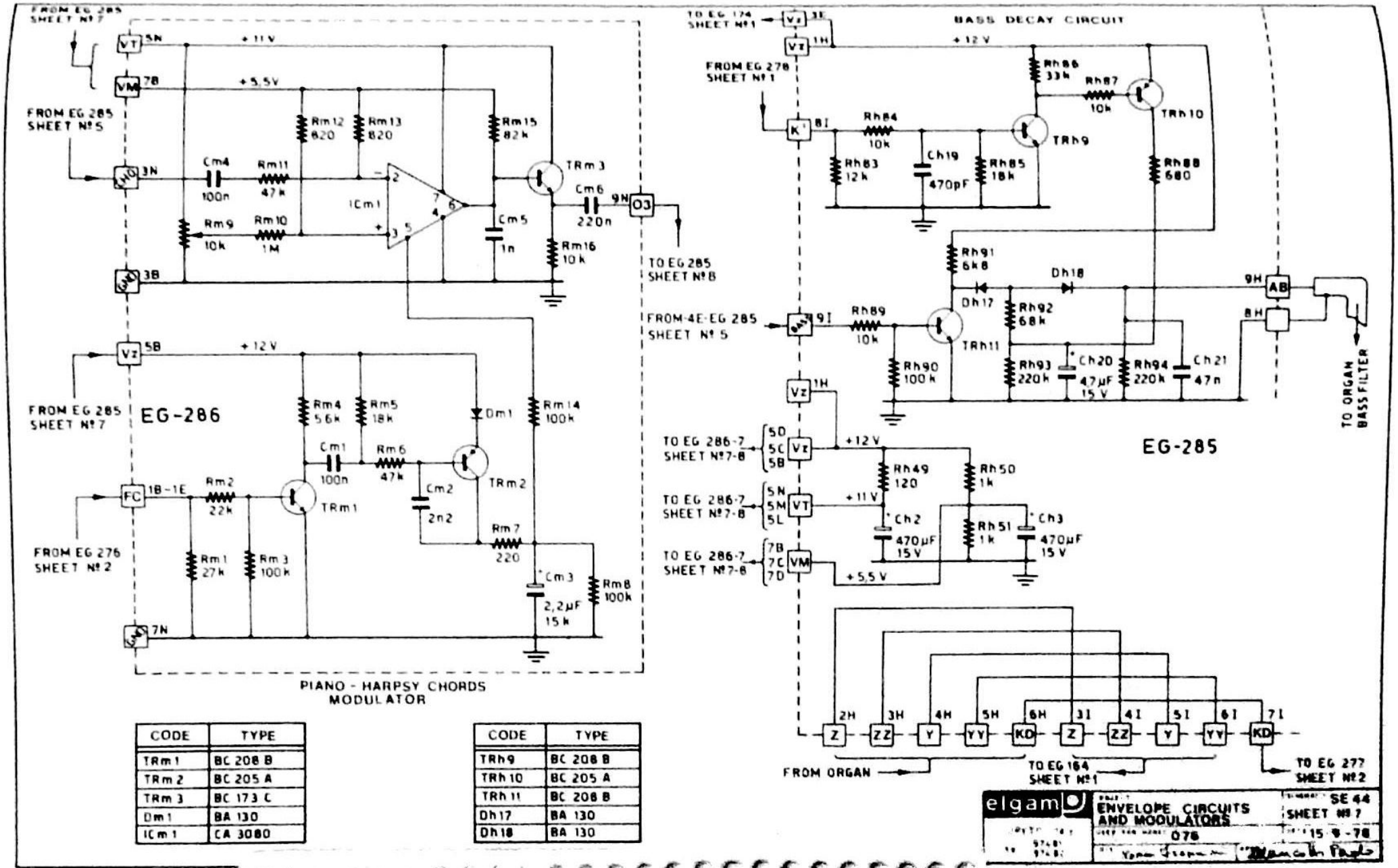

CODE	TYPE
TRm1	BC 208 B
TRm2	BC 205 A
TRm3	BC 173 C
Dm1	BA 130
ICm1	CA 3080

CODE	TYPE
TRh9	BC 208 B
TRh10	BC 205 A
TRh11	BC 208 B
Dh17	BA 130
Dh18	BA 130

Scanned by CamScanner

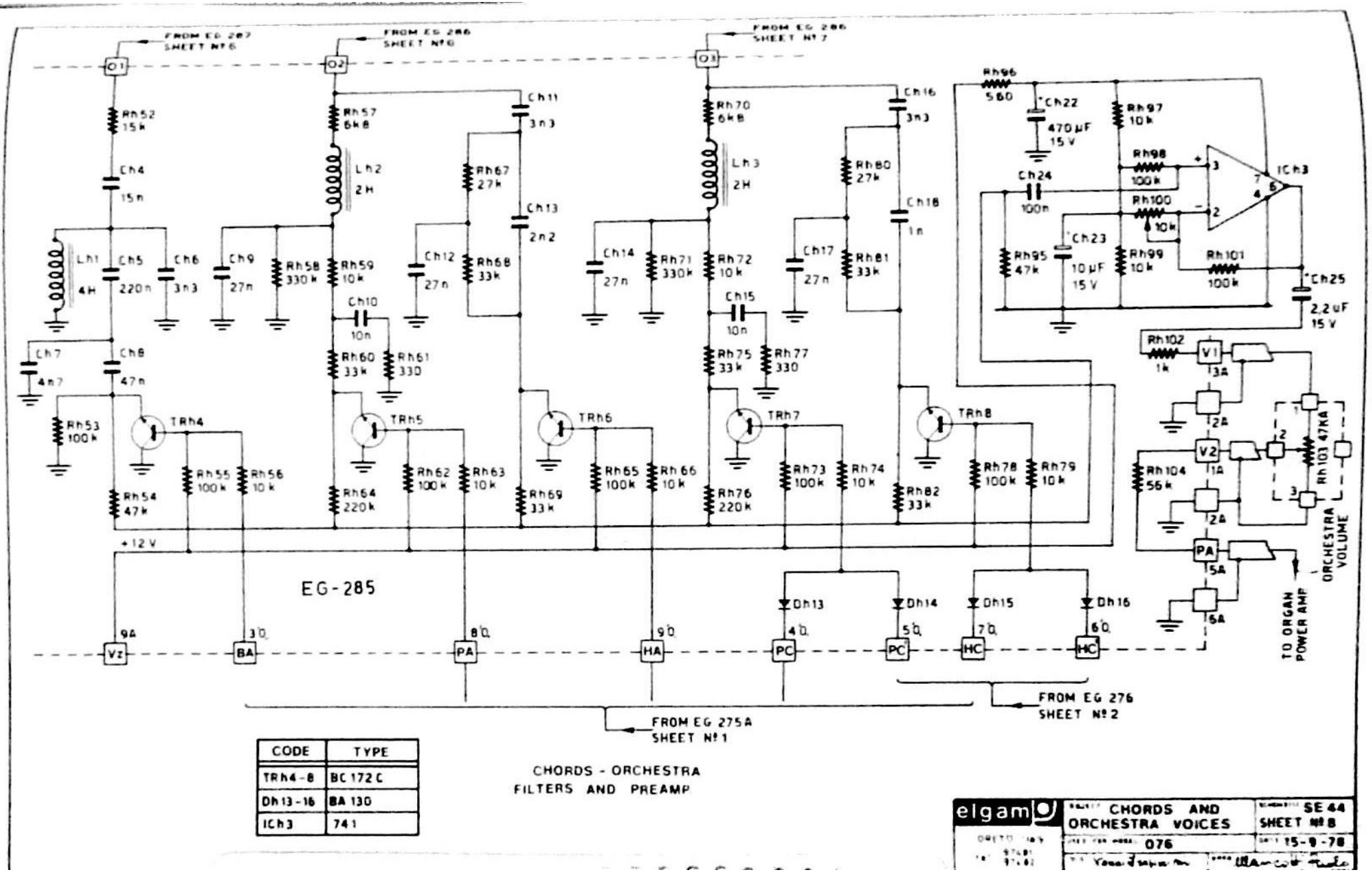

CODE	TYPE
TRh4-8	BC 172 C
Dh13-16	BA 130
ICh3	741

Scanned by CamScanner

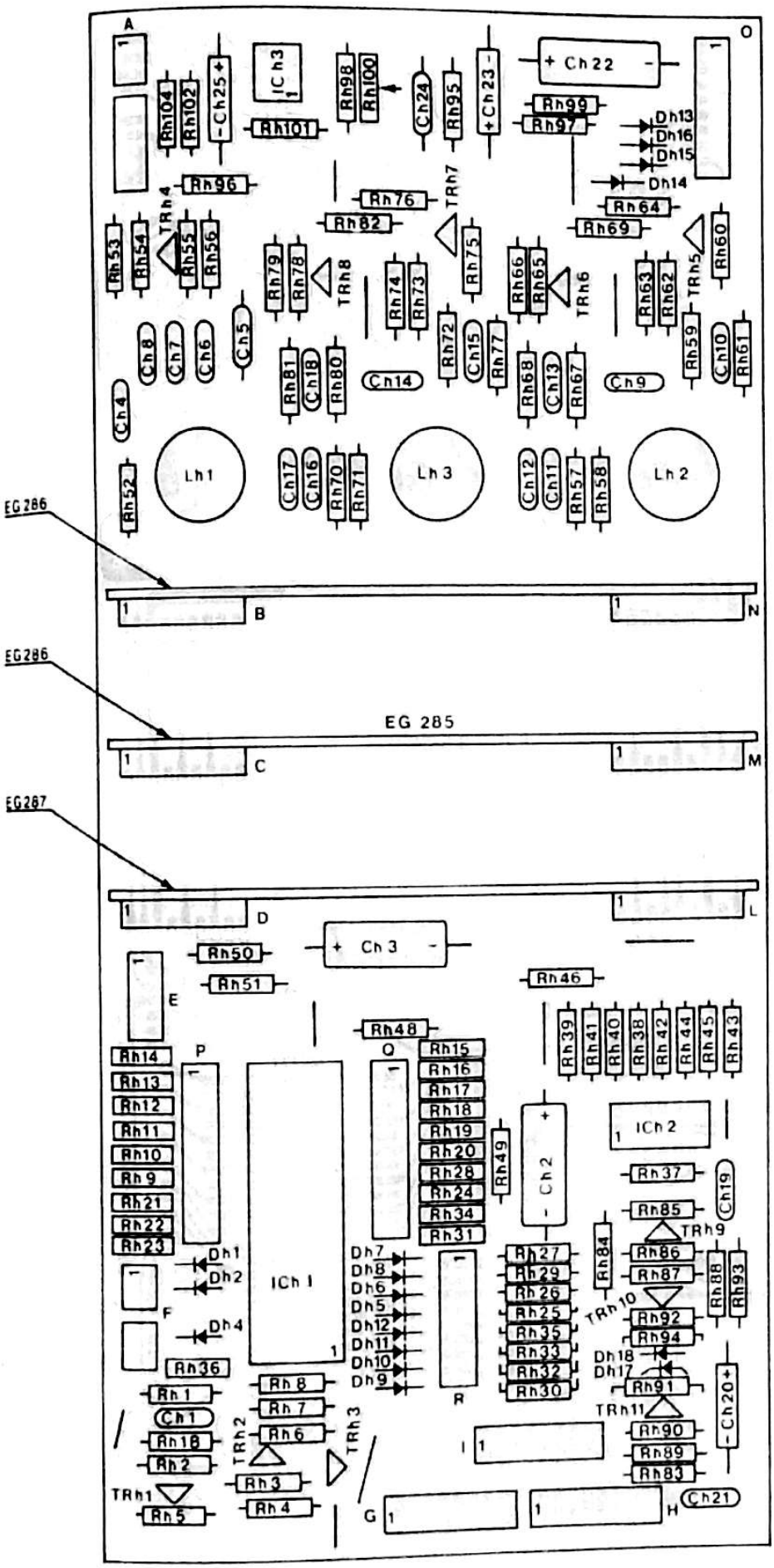

elgam

ASSEMBLY OF PRINTED CIRCUIT

076

SE 44 SHEET 9

6-10-78

Scanned by CamScanner

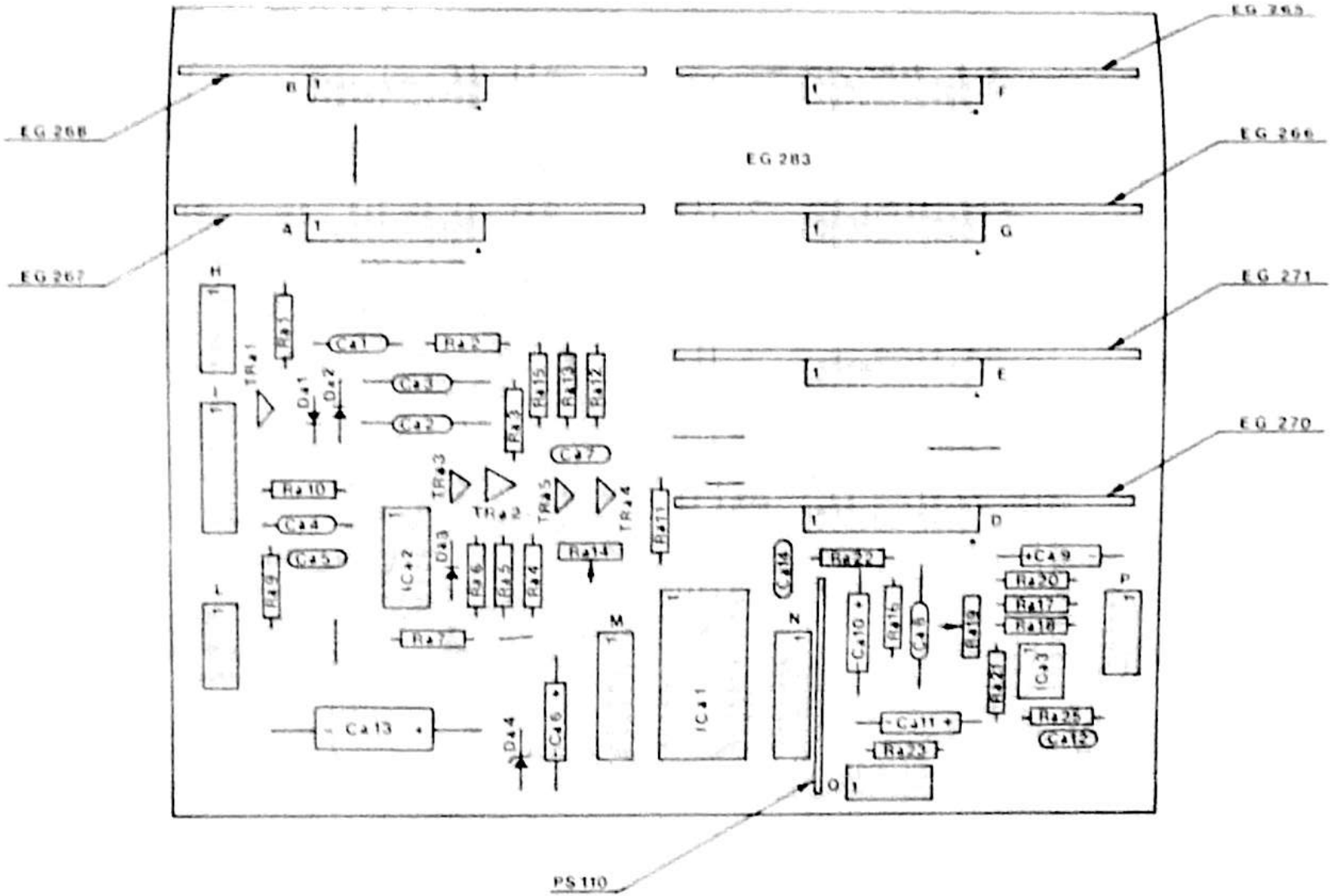

elgam	ASSEMBLY OF PRINTED CIRCUIT	SE 44 SHEET 10
	076	9 10-76

Scanned by CamScanner

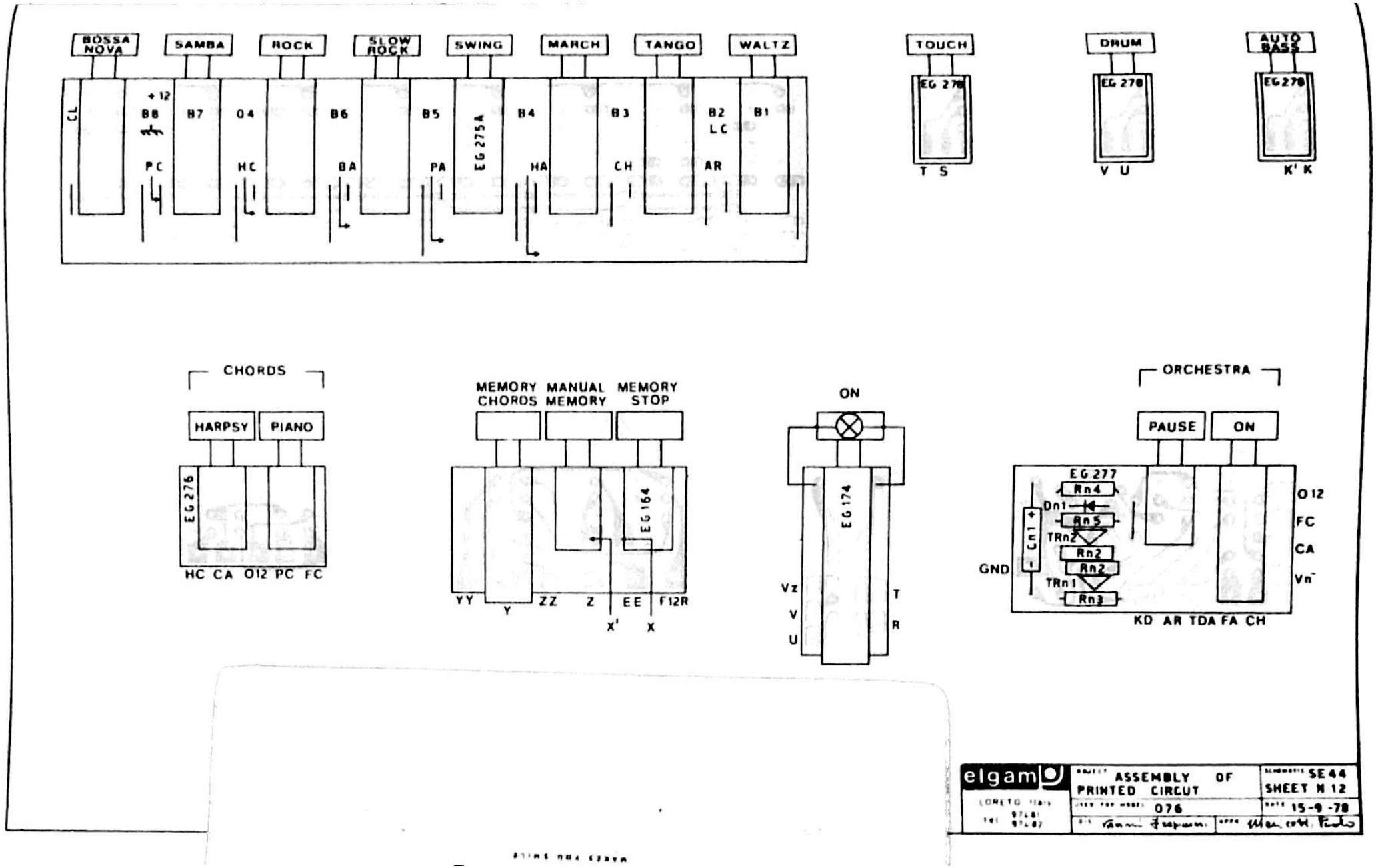

Scanned by CamScanner

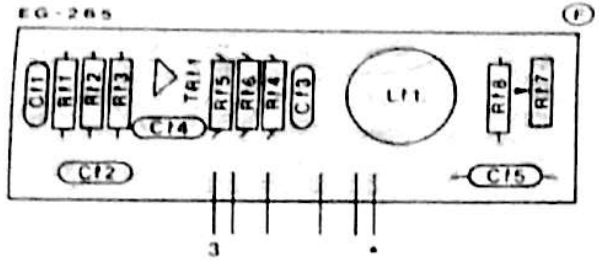

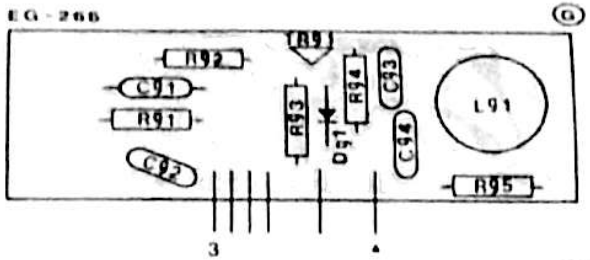

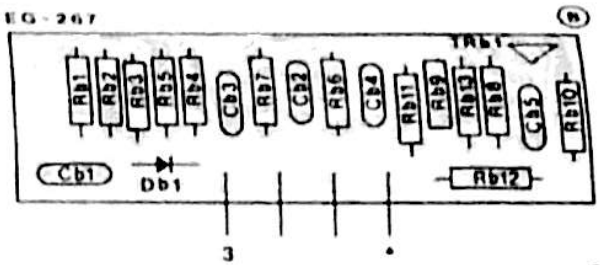

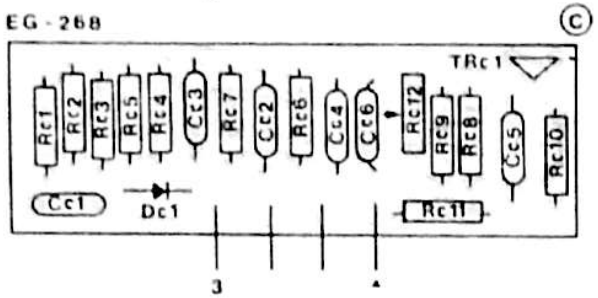

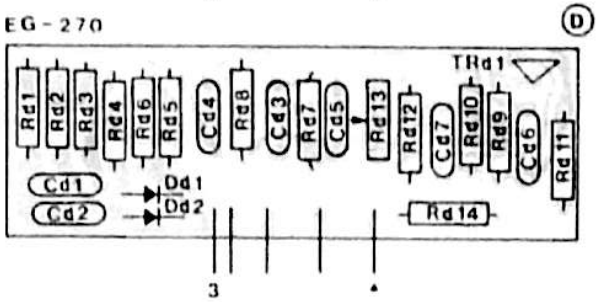

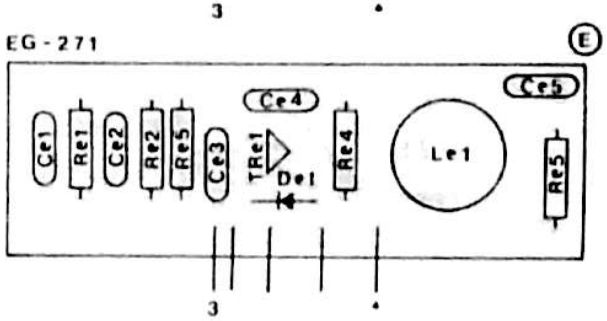

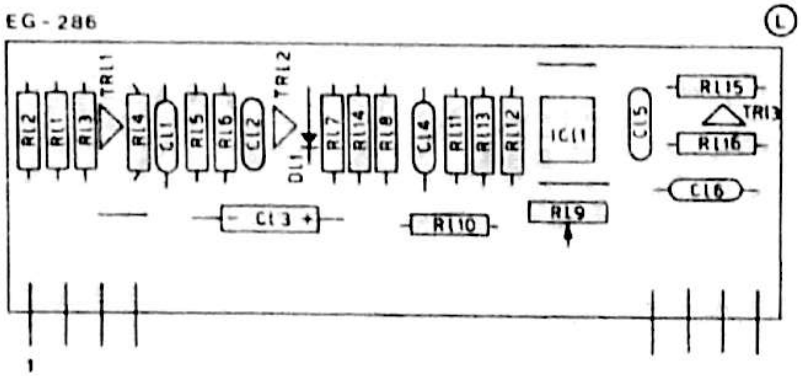

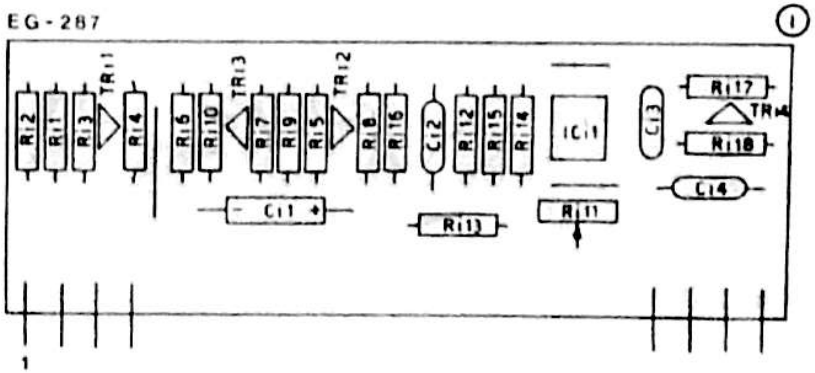

NOTE

THE SAME ASSEMBLY FOR EG 286
CHORDS MODULATOR PRINTED CIRCUIT

elgam	ASSEMBLY OF PRINTED CIRCUIT	SE 44 SHEET Nº 11
	076	10 10 78

Scanned by CamScanner